Name: _____ Date: _____

Measuring Length with a Ruler

Measure the length of each object using the centimetre ruler.
Write your answer in centimetres (cm).

1

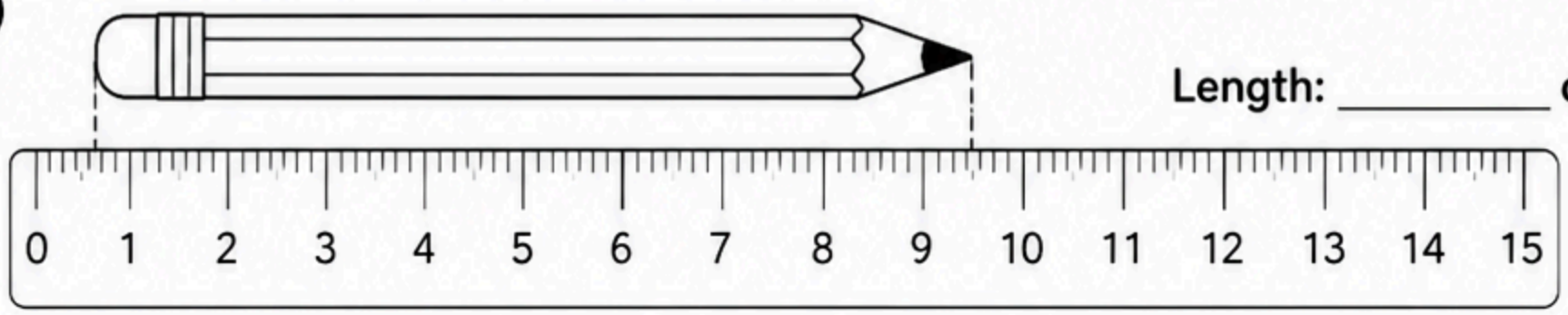

Length: _____ cm

2

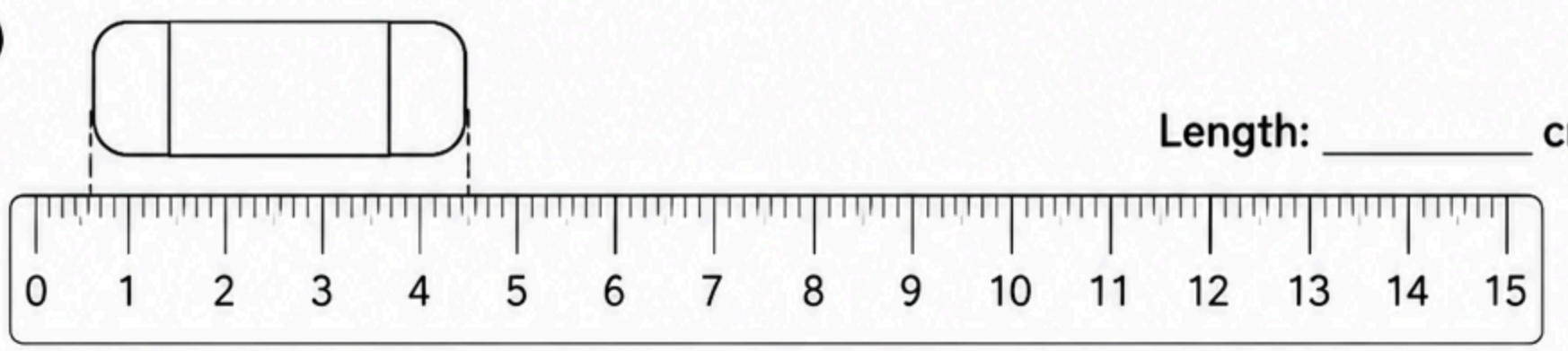

Length: _____ cm

3

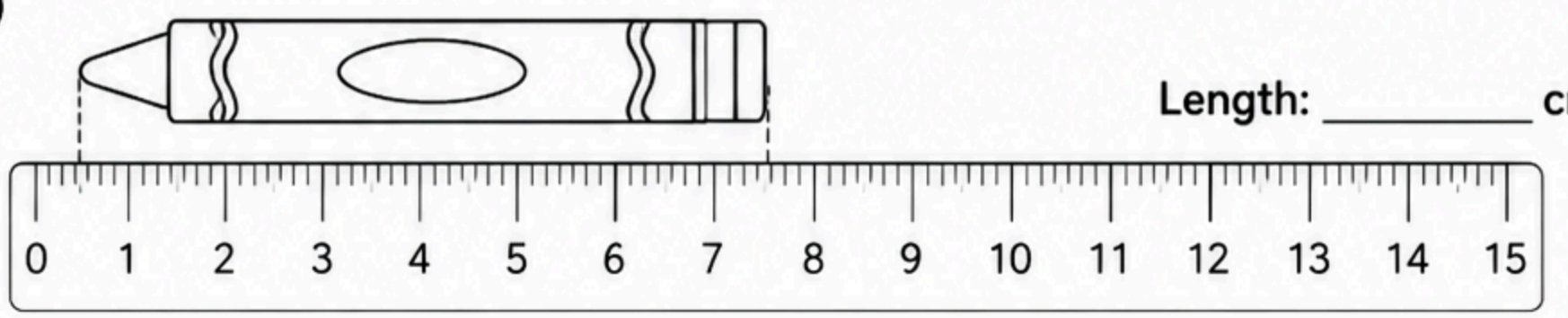

Length: _____ cm

4

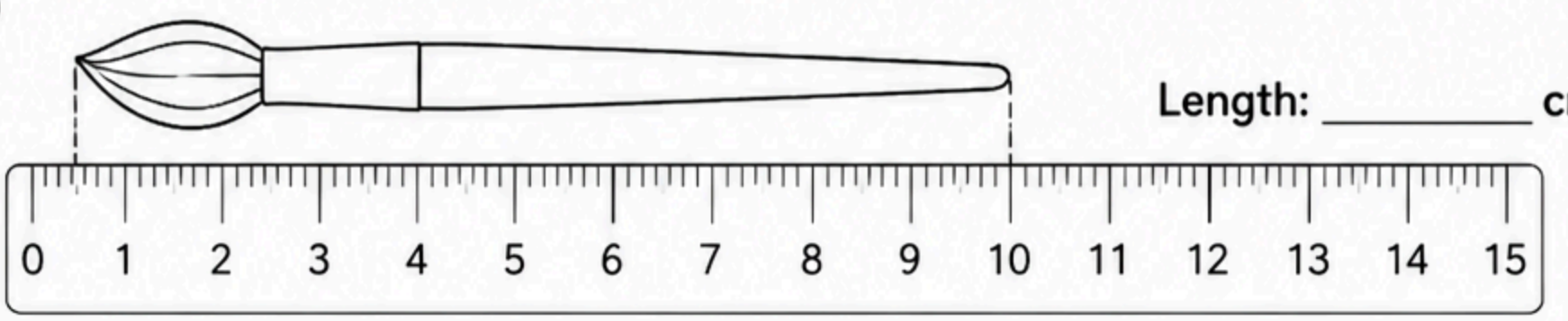

Length: _____ cm

5

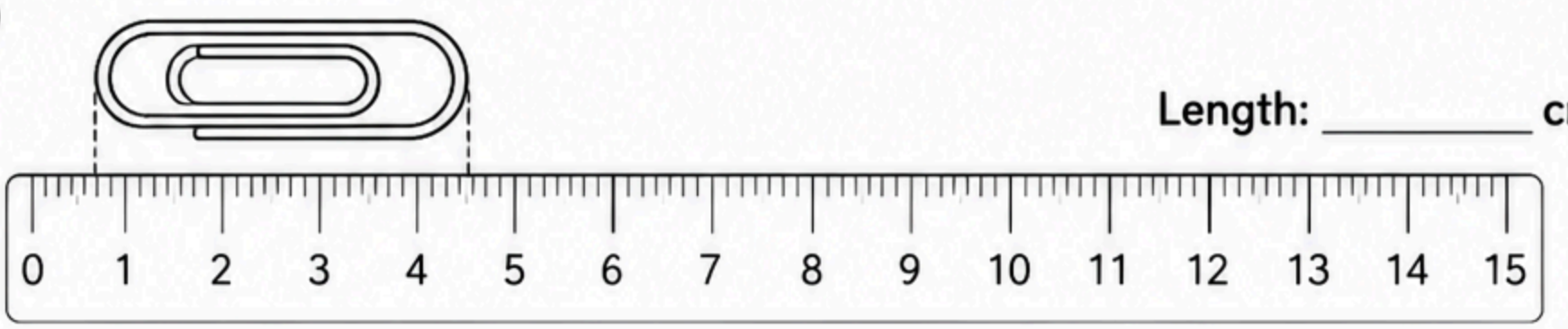

Length: _____ cm